HANGCHA

ZHEJIANG HANGCHA IMP. & EXP. CO., LTD.

Factory site: 666 Xiangfu Road,
Hangzhou, Zhejiang, China (311305)

Tel: +86-571-88926735 88926755
Fax: +86-571-88926789 88132890

sales@hcforklift.com
www.hcforklift.com

Follow us on Facebook

Follow us on YouTube

Follow us on WeChat

Download "Hangcha Forklift" App

ISO14001:2015

ISO9001:2015

HANGCHA trucks conform to the European Safety Requirements.

HANGCHA GROUP CO., LTD. reserves the right to make any changes without notice concerning colors, equipment, or specifications detailed in this brochure, or to discontinue individual models. The colors of trucks, delivered may differ slightly from those in brochures.

2020 VERSION 1/COPYRIGHT 2020/09

X Series IC Forklift Truck

with capacities of 12,000 to 16,000kg

The World of Hangcha

HANGCHA

X SERIES
IC FORKLIFT TRUCK

Professional industrial exterior design, high product recognition, compact and smooth modelling, modern industrial aesthetics. The concealed arrangement of exposed parts makes the exterior cleaner and neater.

The key parts of the old products have been verified to be reliable and durable by the market for many years, and with modular and standardized design, the main parts are verified step by step in advance, so that the vehicle is highly mature. Structural parts such as the frame, mast, etc. are upgraded and optimized on the basis of existing products, and are verified through CAE analysis and testing.

The degree of digitization is improved. With bus architecture and several built-in diagnosis and management functions, a central controller is added to the vehicle to enable a central fault alarm, simplified operations, easy diagnosis and flexible configuration of electrical functions.

OKAMURA gear box with micro-electronic control provides for two-shift power shifting, travelling is stable and accurate.

Optional imaging system with front and rear camera, increasing the safety greatly.

Thanks to the unique design, cab can be tilt without any tools, major service items can be reached easily by tilting the cabin, maximized access is possible.

Excellent all round visibility is achieved by the overall design.

Battery compartment is easy to open for easy maintenance.

The newly designed LCD instrument has more comprehensive functions and more stable performance. It can display the important information such as truck status and engine faults... So that the operator can understand the truck status more intuitively and facilitate maintenance.

Suspended seat with fingertip system that can be easily adjusted to suit each customer.

Heavy-duty traction axle, two-stage deceleration; Wet brake, maintenance-free; Hydraulic release spring action parking brake, safe and reliable.

Fully-suspended all-round vision cab

The new fully-suspended all-round vision cab (HPC) and optimized vehicle outline enable all-round sight and view. Performance of the air conditioner is improved to enable uniform conditioned air blowing from the air outlet and a strong cooling effect. The waterproof, dust-proof, heatproof, soundproof, noise-reducing sealing design improves driving comfort. The molded interior parts enable a more comfortable feel. The integral frame is constituted by profiled steel pipes. The structural parts have higher strength.

Comfort

The compact integral joystick enables accurate remote control. The optimized hydraulic braking curve enables smooth easy-to-control braking. The suspended seat and ergonomically-movable multidirectional adjustable console enable comfortable control.

High Performance

The configuration is improved. A new cab, wet braking drive axle, hydraulic adjustable fork, LCD bus instruments, cooling and heating air conditioner, vehicle LED lights, snail horn and reversing radar and other equipment are provided for the standard configuration. With reserved design, the optional equipment is greatly increased.

Performance is improved and the average operation efficiency is increased by more than 10%.

The overturnable cab, wide-opened hood, devices enable easy access to the oil and water, and the easy-to-dismount large electric control cover plate, make maintenance more convenient.

Comfort

The fully-suspended seat, ergonomic steering wheel and control platform make driving a pleasure.

Safety

A wide view reduces hidden safety hazards caused by blind corners when the vehicle is driving. A spindle and a hydraulic self-locking mechanism are used to connect the cab and the vehicle frame. When the electric or manual hydraulic pump is started, the hydraulic lock is automatically opened and at the same time, the hydraulic cylinder at the bottom of the cab sticks out so that the cab is flipped sideways over the center of gravity, improving the dimension. Safety and convenience of maintenance are improved.

Ergonomic Design

The steering wheel, joystick, control buttons, pedals and seat are all ergonomically designed for easier operation.

Overall Effect

The fully enclosed suspended cab has a curved front window that enables a large viewing angle and has its sides cut in a way different from that for the prior window. The cab doors are all glass, which increases the overall visual range. The exterior design of the whole vehicle is at the forefront of the development of forklift design. Being sturdy and elegant in appearance, the vehicle is practical and stylish. The integrated interior design is simple and comfortable, presenting visual enjoyment to the driver.

Standard Specification

/ Duplex wide-view mast
/ Hydraulic prong adjustment
/ Standard fork
/ Cab
/ Cooling and heating air conditioner
/ Fully hydraulic power steering
/ Quadruple multiway valve
/ Chair sensing system
/ Armrest's multi-directional adjustment device
/ Steering wheel adjusting device
/ Self-locking valve in the tilting fuel circuit
/ Speed limit valve in the lifting fuel circuit
/ High-position emission device
/ Traction device
/ Main power switch
/ Reversing radar
/ LCD bus instrument
/ Neutral indicator
/ Parking braking indicator
/ Charge indicator
/ Preheating indicator
/ Engine oil pressure alarm
/ Air filter alarm
/ Accumulator low pressure alarm
/ Hydraulic oil filter alarm
/ Oil-water separator alarm
/ Engine failure alarm
/ Vehicle LED lights
/ Water thermometer
/ Oil gauge
/ Oil temperature meter
/ Engine hour counter
/ Pneumatic tire
/ Reverse buzzer
/ Snail horn
/ Manual tipping pump
/ Vehicle toolkit

Options

/ User specified color
/ Forks of other specifications
/ Masts of other specifications
/ Solid tire
/ Vehicle intercom
/ Reverse voice buzzer
/ Electronic alarm light (with\without a control switch)
/ Rearview system (optionally with a memory)
/ Front and rear view systems
(optionally with a memory, respectively)
/ Spark arrester
/ Fire extinguisher (2kg \ 4kg)
/ Automatic fire extinguisher
/ Mast LED operation light
/ Four-channel driving record system
/ Speed limit
/ Blue light
/ Weighing system
/ Air prefilter
/ Electrostatic belt
/ Cooling air conditioner
/ Heater
/ Cab fan
/ Electric tipping pump

X Series IC Forklift Truck 12-16t Specification

Distinguishing mark	1.1	Manufacturer		HANGCHA GROUP CO.,LTD.							
	1.2	Manufacturer's type designation		CPCD120-XRXG57B	CPCD120-XRXW25B	CPCD140-XRXG57B	CPCD140-XRXW25B	CPCD160-XRXG57B	CPCD160-XRXW25B	CPCD160-XRMG57B	CPCD160-XRMW25B
	1.3	Drive: electric (battery or mains), diesel, petrol, fuel gas		Diesel		Diesel		Diesel		Diesel	
	1.4	Operator type: hand, pedestrian, standing, seated, order-picker		Seated		Seated		Seated		Seated	
	1.5	Rated capacity/rated load	Q (kg)	12000		14000		16000		16000	
	1.6	Load centre distance	c (mm)	600		600		600		750	
	1.8	Load distance, centre of drive axle to fork	x (mm)	745		825		825		880	
	1.9	Wheelbase	y (mm)	3100		3100		3100		3300	
Weight	2.1	Service Weight	kg	16000		18200		19200		20300	
Tyres, chassis	3.1	Tyres: solid rubber, superelastic, pneumatic, polyurethane		Pneumatic		Pneumatic		Pneumatic		Pneumatic	
	3.2	Tyre size, front		10.00-20-14PR		11.00-20-18PR		12.00-20-20PR		12.00-20-20PR	
	3.3	Tyre size, rear		10.00-20-14PR		11.00-20-18PR		12.00-20-20PR		12.00-20-20PR	
	3.5	Wheels, number front / rear (x = driven wheels)		4×/2		4×/2		4×/2		4×/2	
	3.6	Tread, front	b_{10} (mm)	1780		1780		1780		1780	
	3.7	Tread, rear	b_{11} (mm)	1890		1890		1890		1890	
Dimensions	4.1	Tilt of mast/fork carriage forward/backward	α/β(°)	6/12		6/12		6/12		6/12	
	4.2	Height, mast lowered	h_1 (mm)	3180		3270		3290		3290	
	4.3	Free lift	h_2 (mm)	0		0		0		0	
	4.4	Lift	h_3 (mm)	3000		3000		3000		3000	
	4.5	Height, mast extended	h_4 (mm)	4695		4790		4790		4790	
	4.7	Height of overhead cabin	h_6 (mm)	3265		3280		3300		3300	
	4.8	Seat height relating to SIP	h_7 (mm)	1930		1945		1965		1965	
	4.12	Coupling height	h_{10} (mm)	600		615		635		635	
	4.19	Overall length	l_1 (mm)	6190		6260		6380		6930	
	4.20	Length to face of forks	l_2 (mm)	4690		4760		4880		5130	
	4.21	Overall width	b_1/b_2(mm)	2460/2200		2460/2200		2460/2200		2460/2200	
	4.22	Fork dimensions	s/e/l (mm)	90×180×1500		85×200×1500		85×200×1500		100×200×1800	
	4.24	Fork-carriage width	b_3 (mm)	2370		2370		2370		2370	
	4.25	Distance between fork-arms	b_5 (mm)	520/2200		520/2200		520/2200		520/2200	
	4.31	Ground clearance, laden, below mast	m_1 (mm)	250		250		270		270	
	4.32	Ground clearance, centre of wheelbase	m_2 (mm)	310		325		345		345	
	4.34.1	Aisle width with load length 1500mm	A_{st} (mm)	6800		6875		6975		7630	
	4.34.2	Aisle width with load length 1800mm	A_{st} (mm)	7100		7175		7275		7630	
	4.35	Turning radius	W_a (mm)	4350		4350		4450		4750	
	4.36	Minimum pivoting point distance	b_{13} (mm)	1480		1480		1480		1480	
Performance data	5.1	Travel speed, laden/unladen	km/h	28/24		29/25		29/25		29/25	
	5.2	Lift speed, laden/unladen	m/s	0.34/0.36		0.35/0.38		0.35/0.38		0.35/0.38	
	5.3	Lowering speed, laden/unladen	m/s	0.45/0.40		0.45/0.40		0.45/0.40		0.45/0.40	
	5.5	Drawbar pull, laden/unladen	N	115000/-		115000/-		115000/-		115000/-	
	5.7	Gradeability, laden/unladen	%	20/-		20/-		20/-		20/-	
	5.10	Service brake		Wet disc brake		Wet disc brake		Wet disc brake		Wet disc brake	
		Parking brake		spring applied, hydraulic release multi-disc brake		spring applied, hydraulic release multi-disc brake		spring applied, hydraulic release multi-disc brake		spring applied, hydraulic release multi-disc brake	
Combustion-engine	7.1	Engine manufacturer/type		YC6J160-T300	QSB 6.7-C160	YC6J160-T300	QSB 6.7-C160	YC6J160-T300	QSB 6.7-C160	YC6J160-T300	QSB 6.7-C160
	7.2	Engine power	kW	118	119	118	119	118	119	118	119
	7.3	Rated speed	r/min	2200	2300	2200	2300	2200	2300	2200	2300
	7.4	Number of cylinders/displacement	(-)/(cm³)	6/6500	6/6700	6/6500	6/6700	6/6500	6/6700	6/6500	6/6700
		Emission Std.			StageIIIA/Tier3		StageIIIA/Tier3		StageIIIA/Tier3		StageIIIA/Tier3
	7.9	Vehicle electrical system voltage	V	24		24		24		24	
	7.10	Battery voltage/nominal capacity	V/Ah	2×12/120		2×12/120		2×12/120		2×12/120	
		Rated torque	N·m/r/min	650/1600~1800	731/1500	650/1600~1800	731/1500	650/1600~1800	731/1500	650/1600~1800	731/1500
		Transmissions Manufacturer		Okamura		Okamura		Okamura		Okamura	
		Transmissions Type		Y63270X		Y63270X		Y63270X		Y63270X	
		Stage FWD/RVS		2/1		2/1		2/1		2/1	
Addition data	10.1	Operating pressure for attachments	bar	150		150		150		150	
	10.2	Oil volume for attachments	l/min	110		110		110		110	
	10.3	Hydraulic Tank - capacity (drain & refill)	liter	320		320		320		350	
	10.4	Fuel tank capacity	liter	320		320		320		370	
	10.7	Sound pressure level at the driver´s seat	dB (A)	78		78		78		78	

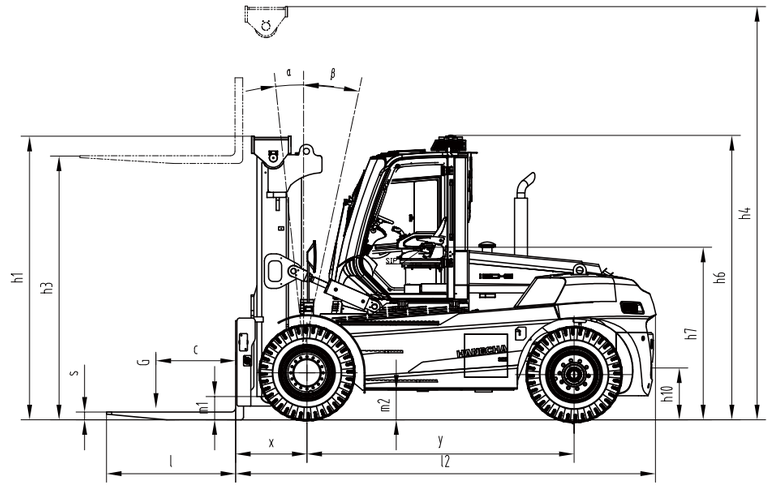

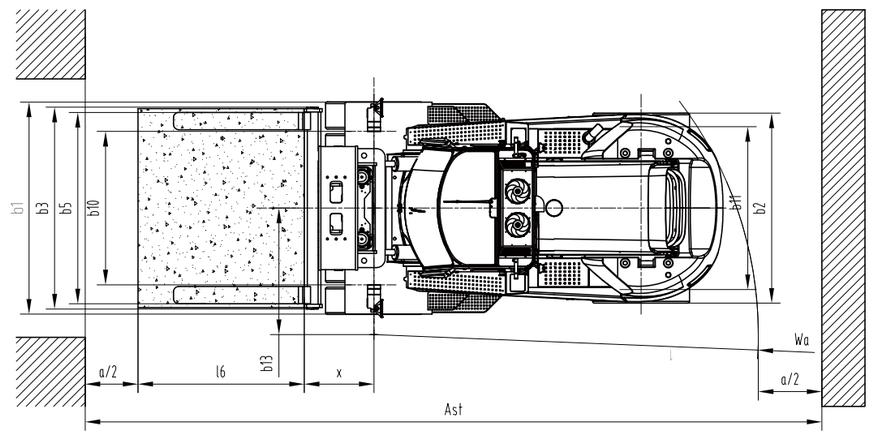

12-16t X Series Mast:(Pneumatic)
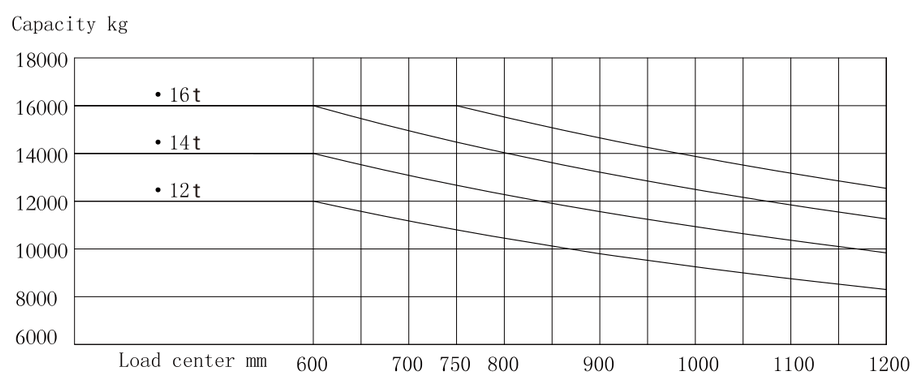
Type	Model	Max. fork height	Overall height				Tilt Range	Capacity			
			Lowered		Extended		F/R	Load capacity at 600mm	Load capacity at 600mm	Load capacity at 600mm	Load capacity at 750mm
			12t	14t/16t	12t	14t/16t		12t	14t	16t	16t
		mm	mm	mm	mm	mm	(°)	kg	kg	kg	kg
Wide view mast	GXRX120/160/161M300	3000	3180	3290	4695	4790	6/12	12000	14000	16000	16000
	GXRX120/160/161M330	3300	3330	3440	4995	5090	6/12	12000	14000	16000	16000
	GXRX120/160/161M360	3600	3480	3590	5295	5390	6/12	12000	14000	16000	16000
	GXRX120/160/161M400	4000	3680	3790	5695	5790	6/12	12000	14000	16000	16000
	GXRX120/160/161M430	4300	3880	3990	6030	6140	6/12	12000	14000	16000	16000
	GXRX120/160/161M450	4500	3980	4090	6230	6340	6/12	12000	14000	16000	16000
	GXRX120/160/161M480	4800	4130	4240	6530	6640	6/6	12000	14000	16000	16000
	GXRX120/160/161M500	5000	4230	4340	6730	6840	6/6	12000	14000	16000	16000
	GXRX120/160/161M550	5500	4530	4640	7280	7390	3/6	10500	12500	14500	14500
	GXRX120/160/161M600	6000	4780	4890	7780	7890	3/6	9000	11000	13000	13000
	GXRX120/160/161M650	6500	5080	5190	8330	8440	3/6	7500	9500	11500	11500